San Francisco International Airport
Shoreline Structures Repair Program
USACE File ID SPN-2023-00412
June 13, 2024
Sheet 1 of 6
Enclosure 1

U.S. Army
Corps of Engineers
San Francisco District
Regulatory Division

SOURCE: Esri, 2023; SFO, 2023; ESA, 2023

SFO Shoreline Structures Repair Program

PROGRAM AREA

SFO

Proposed Project and Program Limits of Covered Repair and Maintenance Activities

Maintenance Activity	Description of Work	Project Limits	Program Limits
IN-WATER REPAIRS			
Guide Lighting Trestle Structure Piers	Strengthen piers/piles.	15	75
Middle Marker Platform Piles			
Outfall Piles			
OVERWATER REPAIRS			
Guide Lighting Trestle Structure	Replace timber guardrails, stringers, and knee braces.	Unlimited	Unlimited
Middle Marker Platform	Replace timber cross braces, guardrails, and platform decking.	Unlimited	Unlimited
Outfalls	Replace timber support beams, stringers, walkway planks, cross bracings, and pipe connection straps on timber trestle–supported outfall structures.	Unlimited	Unlimited
CONCRETE REPAIRS AND UNSUPPORTED STRUCTURE MAINTENANCE			
Outfalls	Repair surface cracks and spalls on concrete outfall structures. Remove small amounts of accumulated sediment; conduct minor maintenance.	Unlimited	Unlimited

All proposed activities would consist entirely of in-kind repair, replacement, or maintenance of existing infrastructure at the following discrete locations:

- Guide Lighting Trestle Repairs (3):
  - End of Runway 28R
  - End of Runway 28L
  - End of Runway 19L
- Middle Marker Platform (1):
  - Timber trestle support structure; approximately 2,250 feet from the end of the guide lighting trestle structure at Runway 19L
- Storm Drain Pump Station Outfalls (9):

SDPS 1D—Outfall E003	Timber trestle support structure
SDPS 2/2A—Outfall E004	Steel trestle support structure
SDPS 1A—Outfall E005	Timber trestle support structure
SDPS 1B—Outfall E006	Timber trestle support structure
SDPS 1C—Outfall E007	Timber trestle support structure
SDPS 17—Outfall E008	Concrete pier
SDPS 18—Outfall E009	Concrete pier
Outfall E010	Unsupported pipe
SDPS 6—Outfall E013	Concrete basin

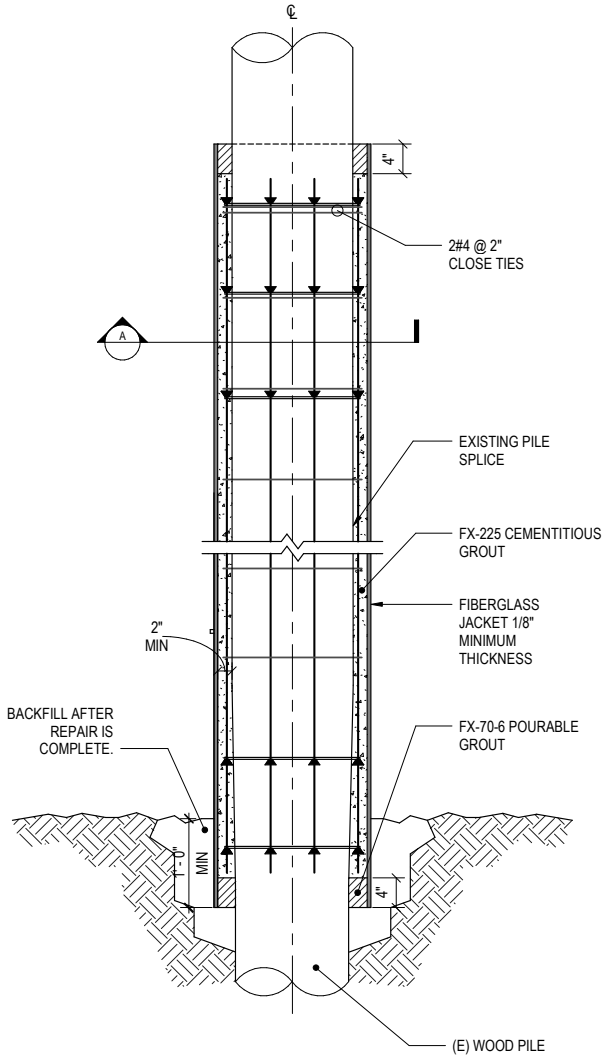

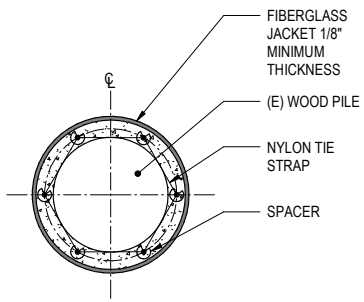

SECTION A-A

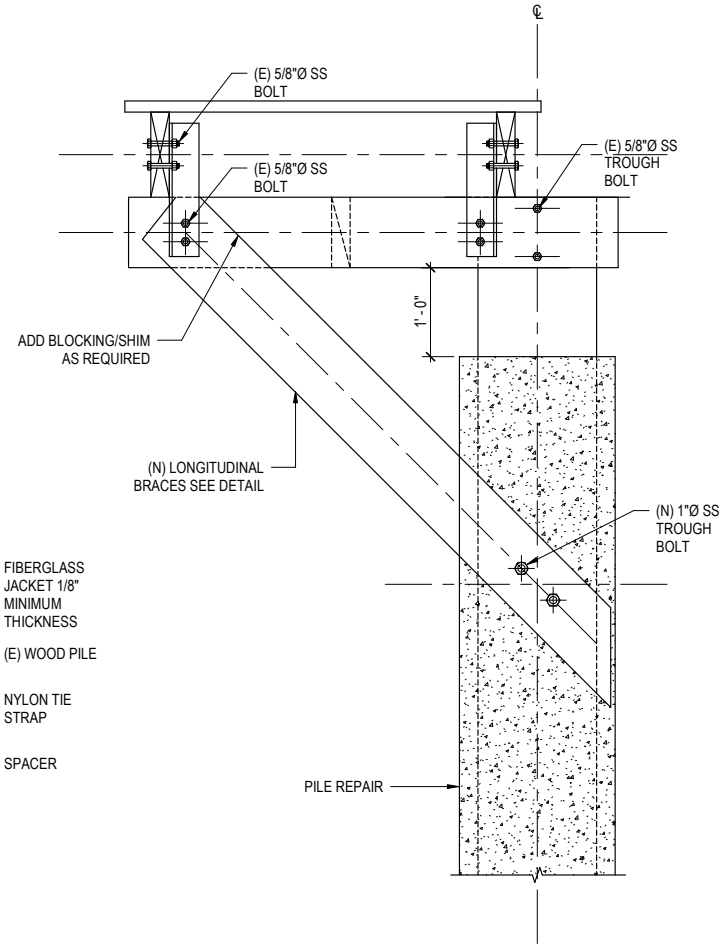

SECTION B-B

SOURCE: SFO, 2023

San Francisco International Airport
Shoreline Structures Repair Program
USACE File ID SPN-2023-00412
June 13, 2024
Sheet 3 of 6
Enclosure 1

U.S. Army
Corps of Engineers
San Francisco District
Regulatory Division

SFO Shoreline Structures Repair Program

PIER/PILE STRENGTHENING DETAIL

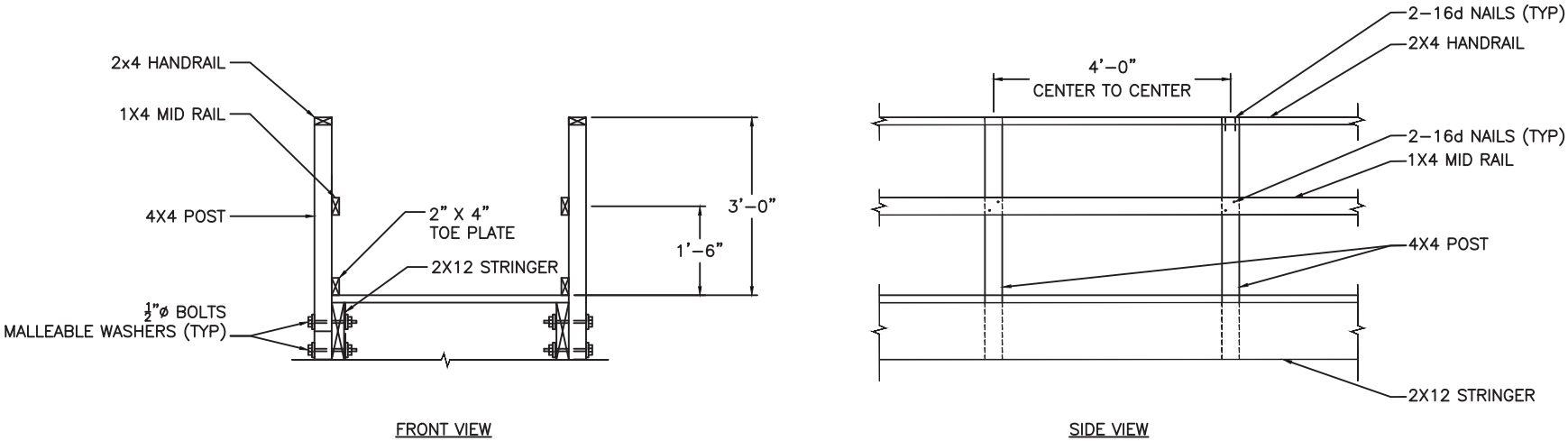

SOURCE: SFO, 2023

SFO Shoreline Structures Repair Program

San Francisco International Airport
Shoreline Structures Repair Program
USACE File ID SPN-2023-00412
June 13, 2024
Sheet 4 of 6
Enclosure 1

U.S. Army
Corps of Engineers
San Francisco District
Regulatory Division

TYPICAL TIMBER TRESTLE COMPONENT REPAIR – GUARDRAIL AND STRINGER

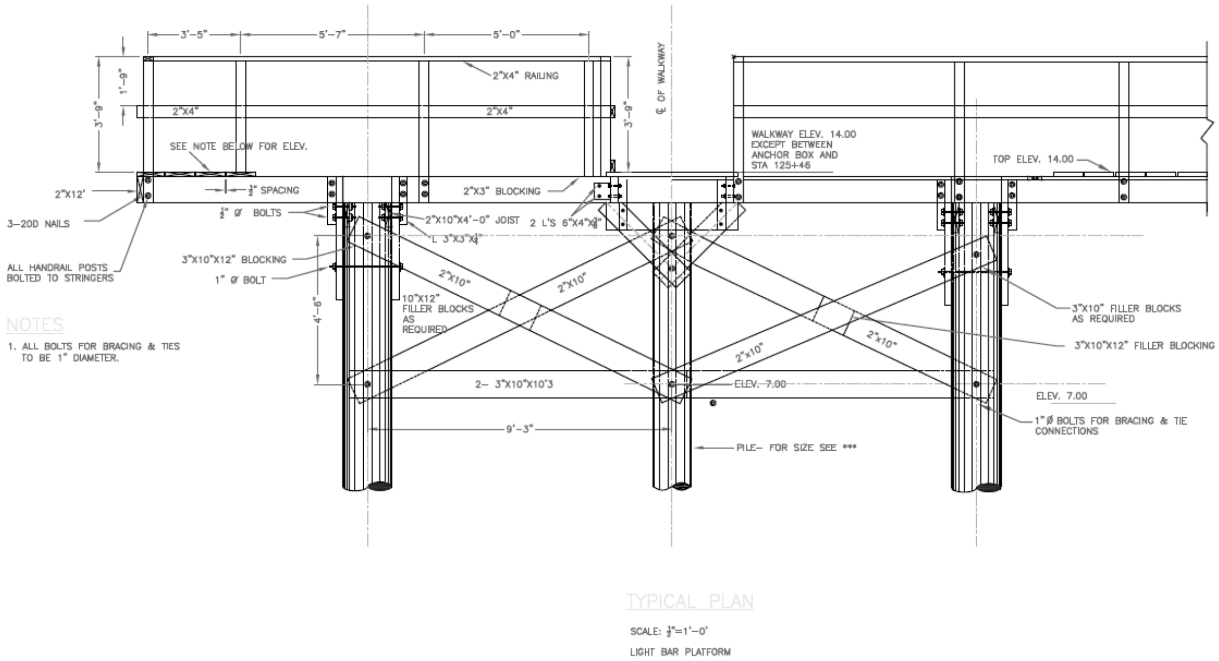

Cross Brace Repair

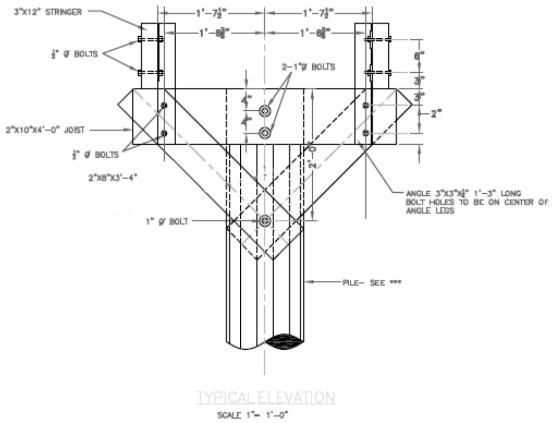

STRINGER, JOIST, & PILE CONNECTION

Knee Brace Repair

SOURCE: SFO, 2023

SFO Shoreline Structures Repair Program

San Francisco International Airport
Shoreline Structures Repair Program
USACE File ID SPN-2023-00412
June 13, 2024
Sheet 5 of 6
Enclosure 1

U.S. Army
Corps of Engineers
San Francisco District
Regulatory Division

TYPICAL TIMBER TRESTLE COMPONENT REPAIR – CROSS AND KNEE BRACE

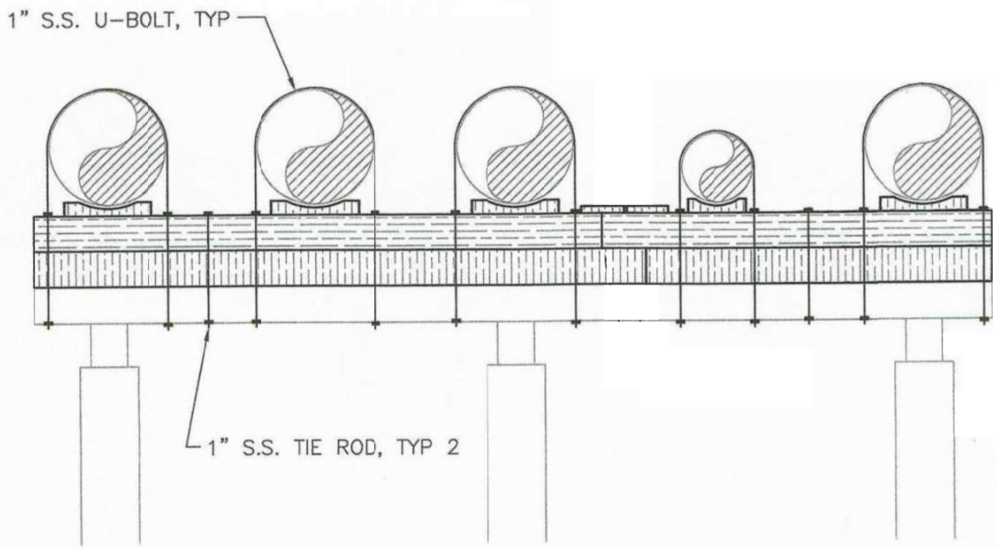

2 – OUTFALL TIMBER STRUCTURE
SCALE: NONE

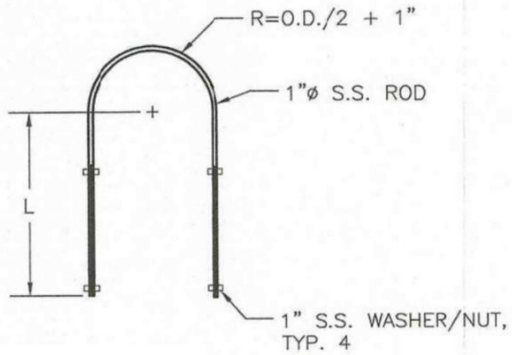

5 – U-BOLT/CRADLE DETAIL
SCALE: NONE

SOURCE: SFO, 2023

San Francisco International Airport
Shoreline Structures Repair Program
USACE File ID SPN-2023-00412
June 13, 2024
Sheet 6 of 6
Enclosure 1

U.S. Army
Corps of Engineers
San Francisco District
Regulatory Division

SFO Shoreline Structures Repair Program

OUTFALL CONNECTION STRAP REPLACEMENT